Trim Double Wall Day Tank - 25 thru 100 Gallon Capacity

PLAN VIEW
SCALE = 1.5X

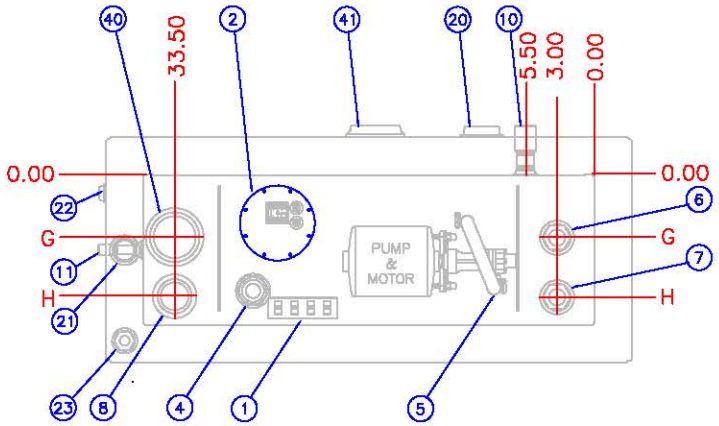

TANK DIMENSION REFERENCE CHART (SHOWN IN INCHES)						
TANK RATED CAPACITY	A - HEIGHT (TANK)	D - DEPTH * (TANK)	E - MTG HOLES (CTR-TO-CTR)	F - DEPTH * (OVERALL)	G - OPENING LOCATION FROM BACK	H - OPENING LOCATION FROM BACK
25 GAL.	29.50	8.00	12.50	14.00	5.00	9.00
50 GAL.	53.00	8.00	12.50	14.00	5.00	9.00
60 GAL.	53.00	10.00	14.50	16.00	6.00	10.75
75 GAL.	53.00	12.00	16.50	18.00	8.00	12.75
100 GAL.	53.00	16.00	20.50	22.00	7.00	15.00

* Depth dimension - Front-to-Back

NOTE - Both Day Tank & Double Wall Secondary Containment Area are vented

REF#	DESCRIPTION OF STANDARD EQUIPMENT
1	CONTROL PANEL
2	6-1/2" X 6-1/2" INSPECTION PLATE
3	REMOVABLE COVER
4	1-1/2" NPT - FUEL LEVEL GAUGE
5	FUEL INLET/OUTLET TO/FROM TANK
6	2" x 1" NPT - ENGINE FUEL SUPPLY w/DROP TUBE
7	2" x 1" NPT - ENGINE FUEL RETURN w/DROP TUBE
8	2" NPT - TANK VENT TO ATMOSPHERE
9	1" NPT - DROP TUBES for ENGINE SUPPLY & RETURN
10	1" NPT - OVERFLOW TO MAIN STORAGE TANK
11	1/2" NPT - TANK DRAIN (PIPED THROUGH & PLUGGED)
20	2" NPT - VENT TO ATMOSPHERE for DOUBLE WALL SECONDARY CONTAINMENT AREA
21	1-14" NPT - INSPECTION PORT for DOUBLE WALL SECONDARY CONTAINMENT AREA
22	3/8" NPT - DRAIN for DOUBLE WALL SECONDARY CONTAINMENT AREA
23	1/2" NPT - For OPTIONAL LEAK DETECTOR (NOT SUPPLIED) for DOUBLE WALL SECONDARY CONTAINMENT AREA
ADDITIONAL EQUIPMENT IF TANK IS U/L LISTED	
40	NPT CONNECTION FOR U/L EMERGENCY RELIEF VENT (See Above Chart For Size)
41	NPT CONNECTION FOR U/L EMERGENCY RELIEF VENT for DOUBLE WALL SECONDARY CONTAINMENT AREA

LEFT SIDE VIEW

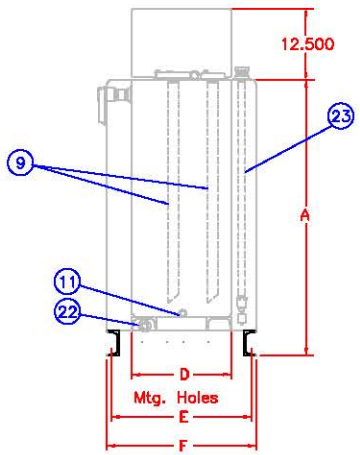

FRONT VIEW

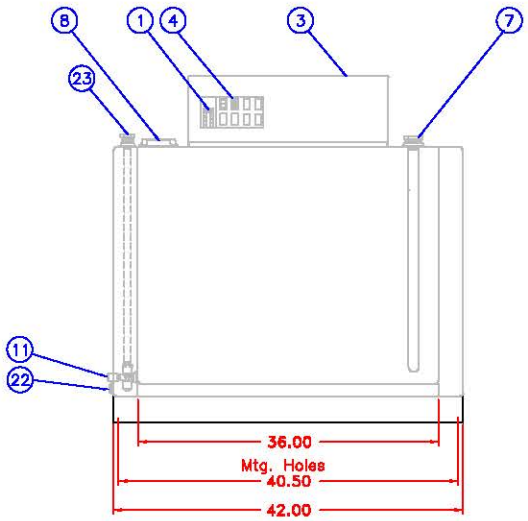

CONSTRUCTION NOTES
1 - TANK TOP, BOTTOM, & SHELL - 12 GAUGE STEEL
2 - DIMENSIONS SUBJECT TO CHANGE WITHOUT NOTICE

TRIM DOUBLE WALL DAY TANK
PY25TDW - PY100TDW
PY25TULDW - PY100TULDW (U/L Listed Version)

PRYCO, INC.
MECHANICSBURG, ILLINOIS

DRAWN BY: RES | DATE: 03/01/2008
CHECKED BY: DJW | REV: 03/01/2008
SHEET NO. 1 of 1 | DWG #: TRM_DW_B

P.O. Box 108, Mechanicsburg, IL 62545
Phone - 217 / 364-4467 Fax - 217 / 364-4494