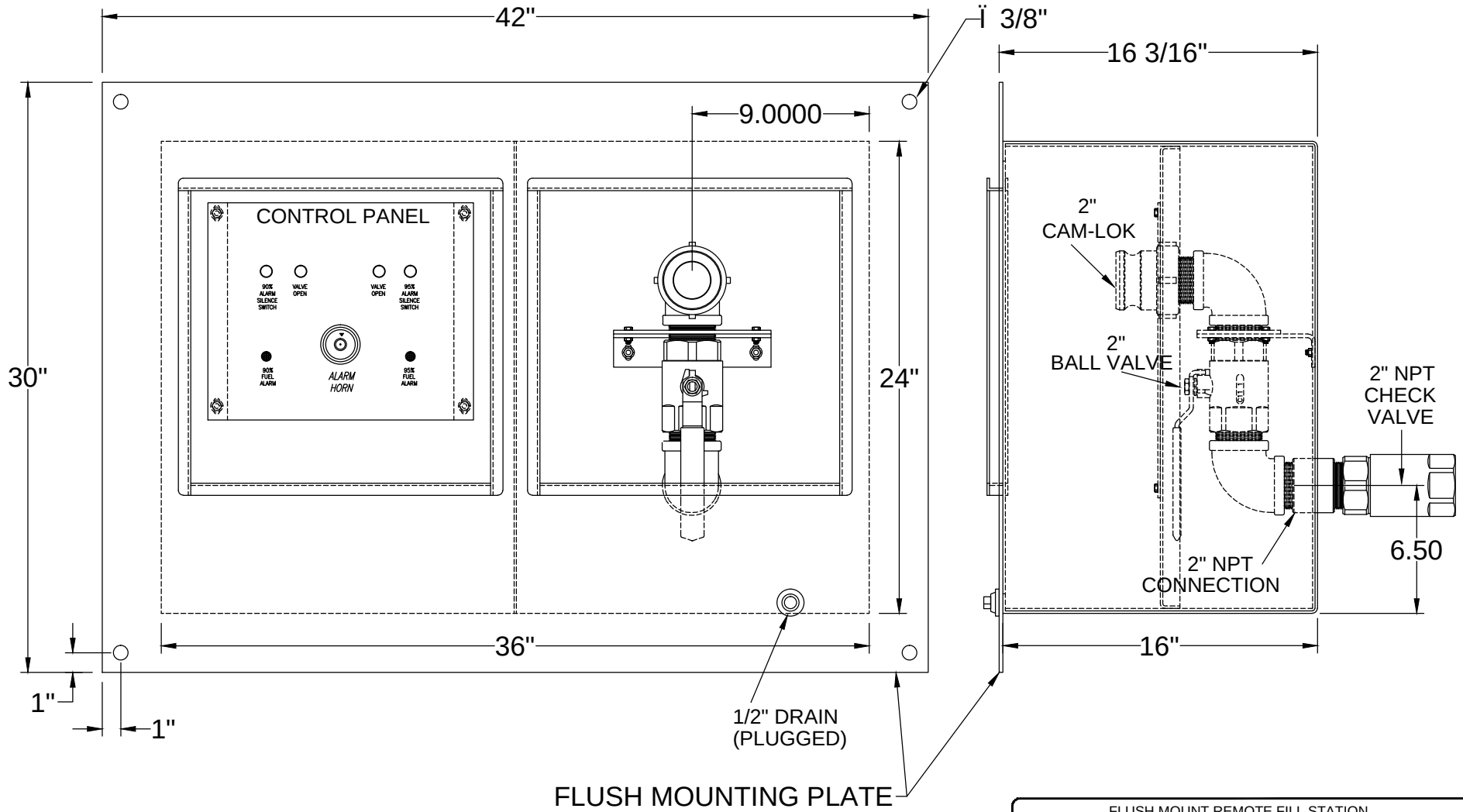

FLUSH MOUNT REMOTE FILL STATION	
WEATHERPROOF ENCLOSURE	
DOORS REMOVED FOR CLARITY	
GENERAL DRAWING	
PRYCO, INC.	
MECHANICSBURG, ILLINOIS	
DRAWN BY: RMC	SHEET NO: 1 OF 1
CHECKED BY: RJW	REV: FLUSH MOUNT
DATE: 12-19-2014	DWG NO:230-22_NEW-FLUSH-2