200% Rupture Basins For Standard & Manual Day Tanks
With 50 To 150 Gallons Capacity

TANK DIMENSION REFERENCE CHART (SHOWN IN INCHES)					
TANK RATED CAPACITY	A - HEIGHT * (TANK)	D - DEPTH ** (OVERALL)	E - MTG HOLES (CTR-TO-CTR)	F - DEPTH ** (INNER TANK)	G - HEIGHT * OF R/B
50 GAL.	38.00	34.00	32.50	24.00	21.00
60 GAL.	46.00	34.00	32.50	24.00	24.00
75 GAL.	51.00	34.00	32.50	24.00	29.00
100 GAL.	51.00	40.00	38.50	30.00	33.00
150 GAL.	51.00	53.00	50.50	42.00	37.00

* Height dimension - TANK = Inner Tank (Top to Floor): R/B = Rupture Basin (Top to Floor)
** Depth dimension - Front-to-Back

ACTUAL DAY TANK LIGHTENED TO EMPHASIS RUPTURE BASIN

MINIMUM CAPACITY OF SECONDARY CONTAINMENT (RUPTURE BASIN & DOUBLE WALL AREAS) IS 200% OF THE INNER TANK CAPACITY

PLAN VIEW

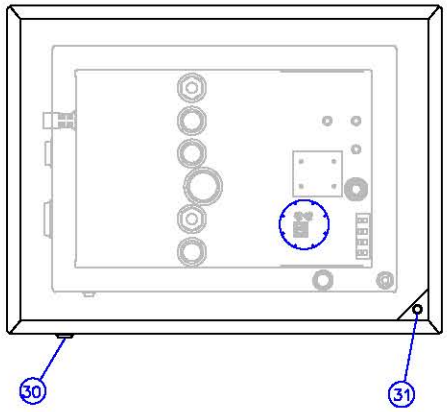

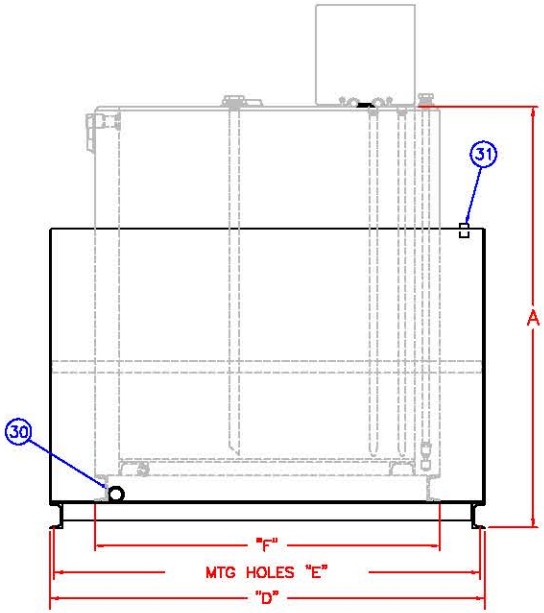

LEFT SIDE VIEW

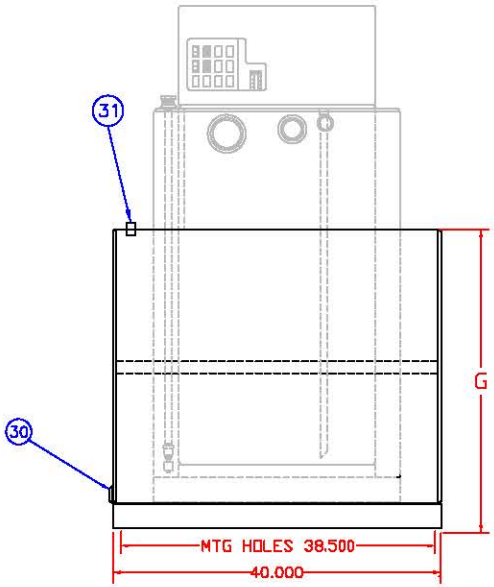

FRONT VIEW

REF#	DESCRIPTION OF STANDARD EQUIPMENT
30	1" NPT - RUPTURE BASIN DRAIN
31	1/2" NPT - FOR OPTIONAL LEAK DETECTOR

CONSTRUCTION NOTES
1 - TANK TOP, BOTTOM, & SHELL - 12 GAUGE STEEL
2 - DIMENSIONS SUBJECT TO CHANGE WITHOUT NOTICE

RUPTURE BASIN - OPTION #386
Containment of 200% Minimum Liquid Capacity of Standard and Manual Day Tanks

PY50 - PY150, (Standard Tanks)
PY50M - PY150M (Manual Tanks)
PY50UL - PY150UL (U/L Listed - Standard)
PY50MUL - PY150MUL (U/L Listed - Manual)

PRYCO, INC.
MECHANICSBURG, ILLINOIS

DRAWN BY: RES	DATE: 03/01/2008
CHECKED BY: DJW	REV: 03/01/2008
SHEET NO. 1 of 1	DWG #: RB_200_B

P.O. Box 108, Mechanicsburg, IL 62545
Phone - 217 / 364-4467 Fax - 217 / 364-4494